Grimstone Inc. Build 001 – Electric Charge Detector

Scope:

This is a simple circuit can detect the invisible fields of voltage which surround all electrified objects. It acts as an electronic “electroscope”.

Parts:

1 – standard 9-volt battery

1 – MPF102 Field Effect Transistor

1 – 9-volt battery clip

1 – Red LED

1 – 1-meg resistor

Circuit

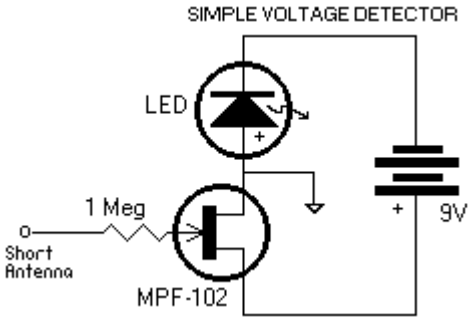

Diagram

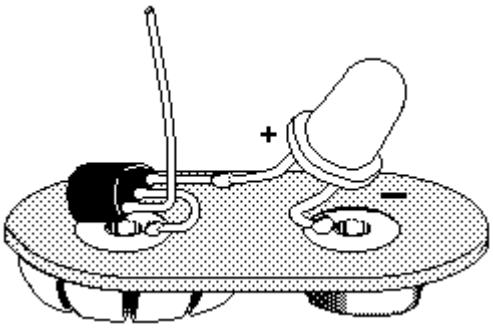

Directions:

1. Cut and remove plastic backing from the 9-volt battery clip.
2. Carefully cut and remove wires from the battery clip leaving the two metal discs.
3. Bend the Gate wire of the FET upwards (see the small diagram above to see which lead is the Gate, or check the diagram on the cardboard of the Radio Shack FET.) The Gate acts as an antenna, so leave it unconnected.
4. Solder the middle transistor lead to the red positive lead for the 9V battery clip.

5. Solder the remaining transistor lead to the positive lead of the LED (the longer LED lead is usually the positive one.)
6. Solder the LED's remaining lead (the negative one) to the black negative lead for the 9V battery clip.
7. Solder one end of the 1-meg resistor to the Gate wire of the FET. This increases the sensitivity of the antenna.
8. Check all connections twice, then carefully connect the 9V battery to the battery clip. The LED should light up. If the LED remains dark, try lighting it up by waving an electrified plastic pen or ruler near the Gate wire (electrify the plastic by rubbing it on hair.)

To test the circuit, electrify a pen or a comb on your hair, then wave it close to the little "antenna" wire. The LED should go dark. When you remove the electrified pen or comb, the LED should light up again.

<u>Experiment:</u>

SENSE E-FIELDS

Connect the circuit to its battery, and the LED will turn on. Comb your hair, then hold the comb near the Field Effect Transistor (FET) gate wire. The LED will go dark. This indicates that the comb has an excess of negative electric charge, and the FET responds to the electrostatic field surrounding the comb. It acts as a switch and turns off. Remove the comb and the LED brightens again. Wiggle the comb, and find at how great a distance the circuit still detects it. It's amazing how far an e-field extends around an electrified object. (But then, e-fields should extend to infinity, no?)

On a very low-humidity winter day the circuit will respond at a much greater distance. This happens because, when humidity is low, the combing of your hair then generates a much stronger separation of electric charge upon the comb's surface. Note that a metal comb will not work, since any separated electric charge immediately weakens by spreading to your hand and across your whole body. A plastic or hard rubber comb works well because rubber is an insulator and the imbalanced charges can't leak off the comb.

Try simply TOUCHING a plastic pen briefly to hair. The FET will detect even this tiny negative net-charge on the pen. The sensor will usually not indicate the equal positive that appears on your hair, since hair is made conductive by humidity, and the positive net-charge leaks to your head. The polarity of the surface electric charge on the comb or plastic pen is negative. The rule for this FET is, negative electric charge turns the switch (and the LED) off.

Resources:

"RIDICULOUSLY SENSITIVEELECTRIC CHARGE DETECTOR©1987 William J. Beaty." *Build This Simple "electronic Electroscope," a FET Electrometer*. N.p., n.d. Web. 12 Jan. 2014

"Easy Build ESD, Static Electric Detector and Also Ion Detector Possibly???" *YouTube*. YouTube, 24 May 2013. Web. 12 Jan. 2014.